OXFORD INSTRUMENTS | ANDOR

Newton SO Series

Direct Detection Spectroscopy

Key Specifications

- ✓ 1024 x 255 or 2048 x 512 matrix
- ✓ Peak QE up to 95% (soft X-ray region)
- ✓ TE-cooling down to -100˚C
- ✓ Spectral rates up to 1,612 sps
- ✓ Plug-and-Play USB 2.0
- ✓ LabVIEW and EPICS compatibility

Key Applications

- ✓ VUV/EUV/XUV spectroscopy
- ✓ X-ray plasma diagnostics
- ✓ X-ray Fluorescence (XRF)
- ✓ X-ray Diffraction (XRD)
- ✓ X-ray source characterization
- ✓ High Harmonic Generation (HHG)

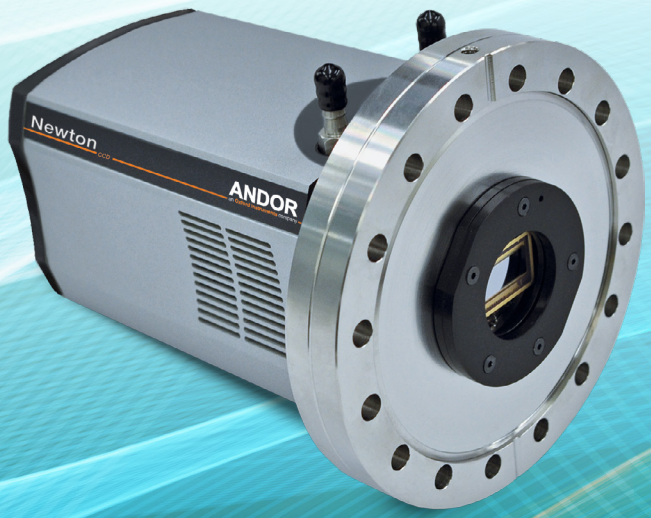

andor.oxinst.com

Introducing Newton SO

High Resolution, High Sensitivity and High Dynamic Range 'Direct' Detection

Andor's Newton series offers outstanding sensitivity performance through a combination of > 95% QE **back-illuminated** sensors, low noise readout electronics and industry-leading, maintenance-free **deep TE-cooling down to -100°C**. It features a 1024 x 255 (26 µm pixel) and a 2048 x 512 (13.5 µm pixel) matrix options optimised for **high dynamic range & high speed** and **high spatial resolution** spectroscopy in the VUV and soft X-ray range.

A convenient 16-point, knife-edge sealed 6" rotatable CF-152 flange provides a **robust** and highly effective seal to any compatible vacuum chamber interface. The Newton SO platform also offers a USB 2.0 interface and LabVIEW or EPICS compatibility for **seamless integration** into complex setups.

Features & Benefits

Feature	Benefit
Open-front end •[1]	DN100CF / 6" CF / CF-152 flange and knife-edge sealing provided as standard for direct interfacing to vacuum chambers.
1024 x 255 and 2048 x 512 sensor options	Choice of high acquisition speed and dynamic range or high resolution.
26 x 26 and 13.5 x 13.5 µm pixel size options	Ideal balance of dynamic range and resolution.
Peak QE up to 95%	High photon collection efficiency for maximising signal-to noise ratios. 'Enhanced' process back-illuminated sensor options for increased QE in the soft X-ray range.
Thermo-electric cooling down to -100°C	Efficiently minimizes dark current noise for acquisitions requiring longer sensor exposure time, obtain better signal-to-noise ratios faster.
Low noise readout down to 2.5 e^-	Intelligent low-noise electronics offer the most 'silent' system noise.
Up to 3 MHz pixel readout speed	Slow readout for low noise and best SNR performance, faster speed for studying dynamic processes.
Cropped sensor mode	Specialized acquisition mode for continuous imaging with fast temporal resolution, spectral rates up to 1,600 sps.
USB 2.0 interface	Built-in robust plug and play interface as standard.
Enhanced baseline clamp	Slower readout for lowest noise, faster speeds for more rapid readout and focusing.
Software Development Kit (SDK)	Ease of control integration into complex setups: MATLAB, LabVIEW, Visual Basic, C/C++ or Linux.
Integrated in EPICS	Seamless integration and operation at EPICS-based particle accelerators.
Filter and filter holder options	Accommodate beryllium (or aluminium) windows with thickness down to 200 µm for removal of unwanted lower energy radiations.
Open front to standalone converter options	Provides maximum flexibility – camera can attach directly to a vacuum chamber or be used as standalone with a beryllium filter.

Technical Data

System Specifications •2

Model number	DO920P	DO920P BR-DD	DO940P
Sensor options	● BEN: Back-Illuminated CCD, enhanced process, uncoated	● BR-DD: Back-Illuminated, Deep Depletion CCD	● BN: Back-Illuminated CCD, uncoated ● BEN: Back-Illuminated CCD, enhanced process, uncoated
Active pixels •3	1024 x 255	1024 x 256	2048 x 512
Pixel size	26 x 26 µm	26 x 26 µm	13.5 x 13.5 µm
Image area	26.7 x 6.7 mm with 100% fill factor	26.7 x 6.7 mm with 100% fill factor	27.6 x 6.9 mm with 100% fill factor
Max spectra per second •4	273 (full vertical bin) 1,612 (Crop mode - 20 rows)	272 (full vertical bin) 1,587 (Crop mode - 20 rows)	122 (full vertical bin) 943 (Crop mode - 20 rows)
Minimum temperatures •5 Air cooled Coolant recirculator Coolant chiller, coolant @ 10°C, 0.75 l/min	-80°C -95°C -100°C		
Blemish specifications	Grade 1 sensor from supplier. Camera blemishes as defined by Andor Grade A andor.oxinst.com/learning/view/article/ccd-blemishes-and-non-uniformities		

Advanced Performance Specifications •2

	DO920P	DO920P BR-DD	DO940P	
Peak QE •6	>95% (BN/BEN), >90% (BR-DD)			
Active area well depth (typical)	400,000 e^-	650,000 e^-	**BN/BEN**: 100,000 e^-	
Register well depth Standard mode High sensitivity mode High-capacity mode	1,000,000 e^- - -	1,000,000 e^- - -	- 150,000 e^- 600,000 e^-	
Pixel readout rate	3, 1 and 0.05 MHz			
Read noise/ e^-, typical (maximum)•7	Standard mode	Standard mode	High sensitivity	High capacity
0.05 MHz	4 (8)	4 (8)	2.5 (4)	9 (12)
1 MHz	12 (18)	12 (15)	7 (12)	27 (32)
3 MHz	20 (30)	15 (30)	11 (15)	40 (56)
Dark current, e^-/pixel/sec •8 @ -100°C	**BEN**: 0.0003	0.003	**BN/BEN**: 0.0002	
Linearity •9	Better than 99%			
Digitization	16 bit (all speeds)			
Mounting flange	DN100CF / 6" CF / CF-152			
Maximum bakeout temperature	+55°C			
Vacuum compatibility	>10^{-8} millibar			

Quantum Efficiency Curves•6

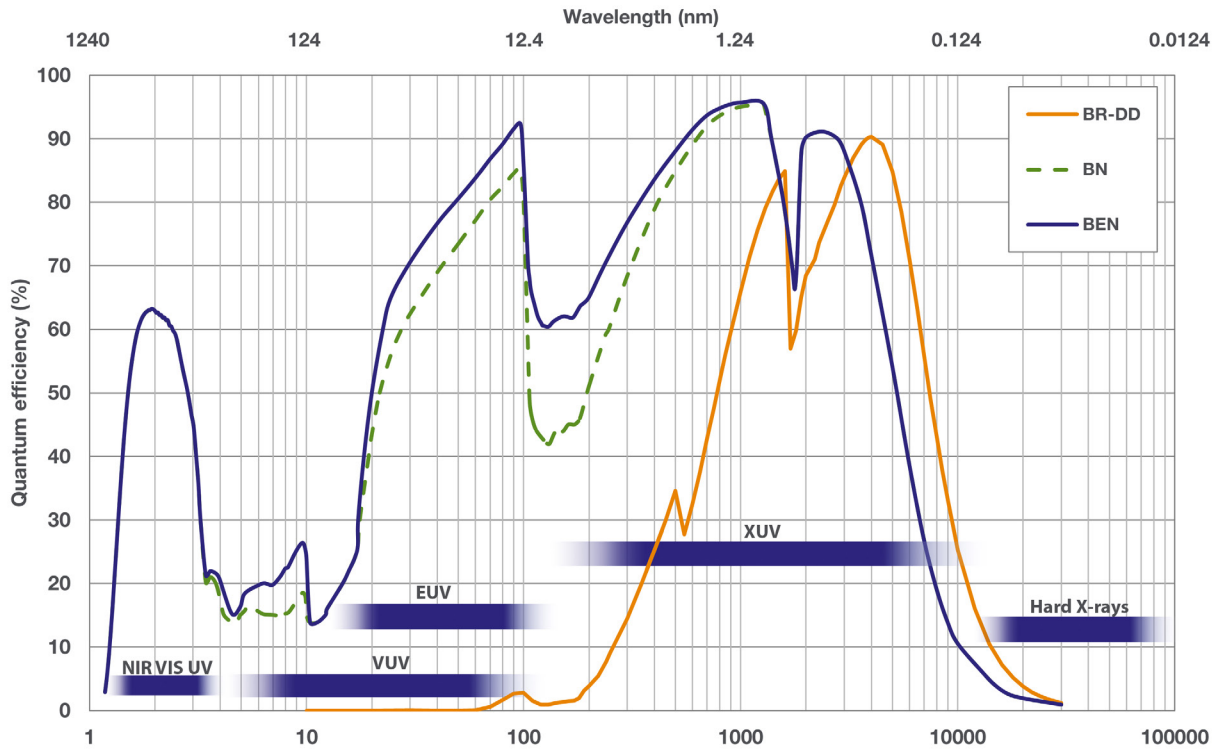

Key:
VUV: Vacuum Ultraviolet, **EUV**: Extreme Ultraviolet, **XUV**: Extreme Ultraviolet (X-ray)

For more information about Andor solutions for 'indirect' detection please go to andor.oxinst.com/products/cameras-for-x-ray-euv-electron-and-neutron-detection

Dark Current Performance

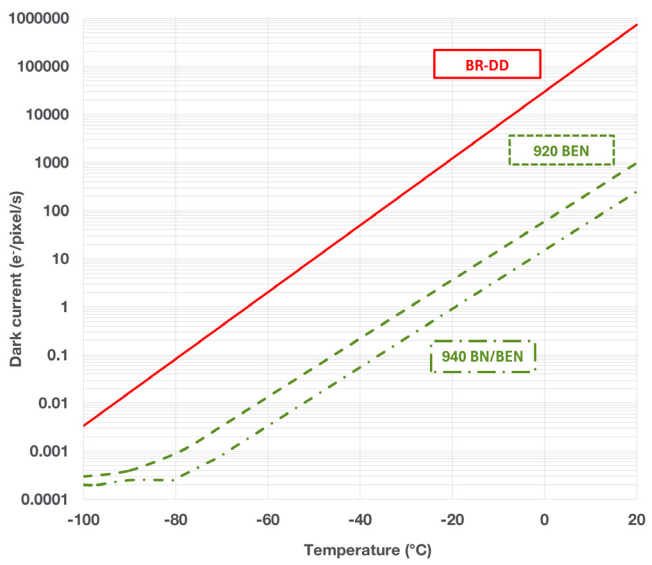

Beryllium Window Transmission

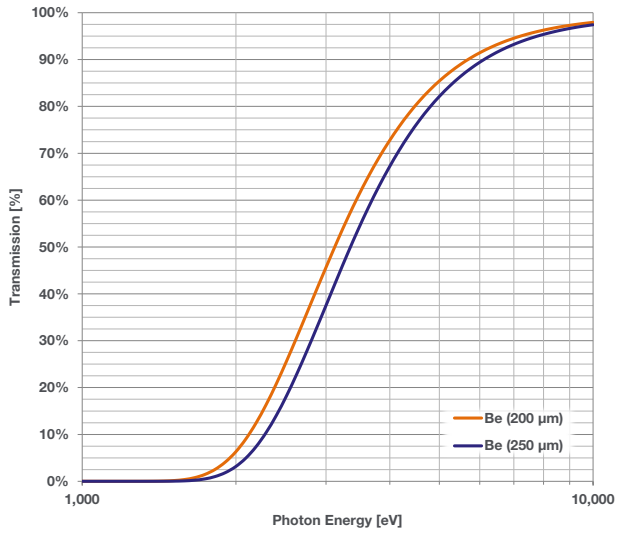

Typical Set-up

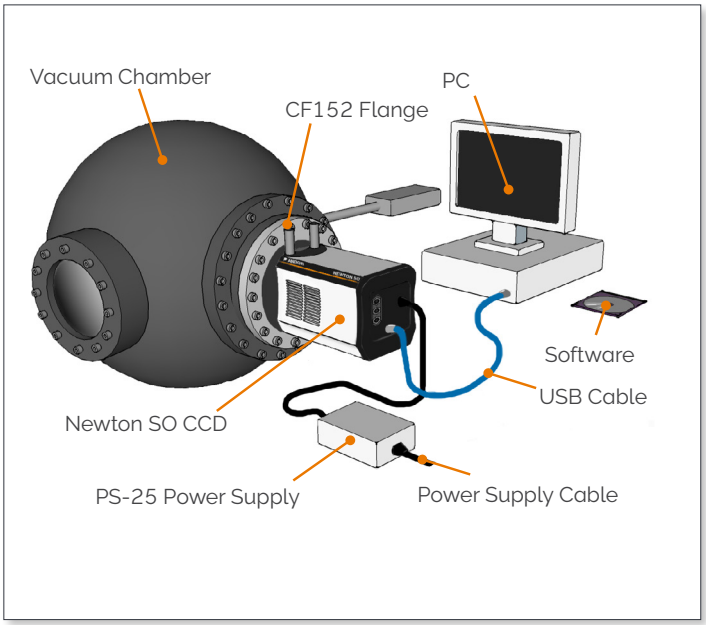

Photoelectrons v Incident X-rays

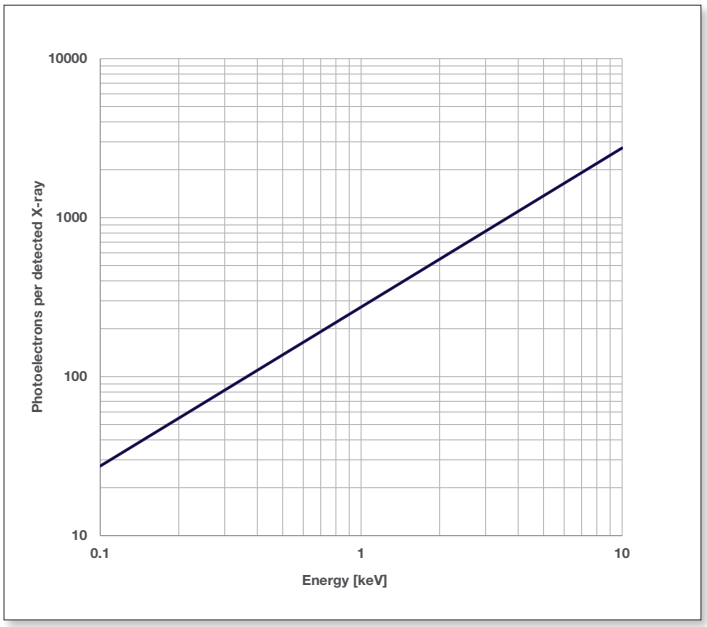

Best Practice Guidelines

Condensation
- It is strongly advised that the camera should not be used in a condensing atmosphere.
- If used in a condensing atmosphere the sensor MUST be protected and the use of a cold finger is strongly recommended.

Contamination & Damage
- When not in use, the sensor chamber should be covered and sealed.
- Due to the exposed nature of the sensor, extreme care should be taken with the camera, as damage can easily occur through mishandling or by contamination.
- If the sensor becomes contaminated, due to accident or misuse, please contact Andor immediately for advice on cleaning.

Vacuum Operations
- Ensure that the vacuum environment to which the camera is fitted is free of water vapour and other contaminants.
- Care should also be taken to control pressure change, as sudden pressure changes can potentially cause damage to the sensor assembly.

Vacuum Units Equivalences

Vacuum Regime	Pressure Range			
	mBar	bar	pascal (Pa)	Torr
Atmospheric pressure	$1.013 \times 10^{+3}$	1.013	$1.013 \times 10^{+5}$	$7.6 \times 10^{+2}$
High vacuum	1×10^{-3} to 1×10^{-9}	1×10^{-6} to 1×10^{-12}	1×10^{-1} to 1×10^{-7}	7.5×10^{-4} to 7.5×10^{-10}
Ultra-high vacuum	1×10^{-9} to 1×10^{-12}	1×10^{-12} to 1×10^{-15}	1×10^{-7} to 1×10^{-10}	7.5×10^{-10} to 7.5×10^{-13}
Extremely high vacuum	$<1 \times 10^{-12}$	$<1 \times 10^{-15}$	$<1 \times 10^{-10}$	$<1 \times 10^{-13}$

Please refer to the Andor Technical Note:
Open-front camera flanges for further details.

Creating The Optimum Product for You

DO 940 P - BEN

example shown

Step 1. Choose the sensor array size

Array Size

Description	Code
1024 x 256 (255) array	920
2048 x 512 array	940

Step 2. Choose the sensor type option

CCD

Sensor Type

Description	Code
Back Illuminated CCD, no AR coating	BN
Back-illuminated CCD, no AR coating, enhanced soft X-Ray QE	BEN
Back Illuminated, Deep Depletion CCD (920P only)	BR-DD

Step 3. Select the required accessories and adapters

Accessories & Adapters

Description	Order Code
Re-circulator for enhanced cooling performance	XW-RECR
Oasis 160 Ultra compact chiller unit	ACC-XW-CHIL-160
6 mm tubing options for ACC-XW-CHIL-160 (2x2.5 m or 2x5 m lengths)	ACC-6MM-TUBING-2X2.5/ ACC-6MM-TUBING-2X5M
USB Extender: Icron USB 2.0 Ranger 2201 (100 m) - EU/UK/US	ACC-USBX-EU ACC-USBX-UK ACC-USBX-US
Copper gasket for DN100CF / 6" CF open-front camera knife-edge vacuum seal	ACC-FLG-SO-GSKT-CU
SO-SY adapter for Newton CCD, Ø45.5 mm filter	FLG-SO-SY-CONVERT-45
Beryllium filter, Ø45.5 mm, 250 µm thick	ACC-OPT-02839

Step 4. Select the required software

Software

The Newton SO requires at least one of the following software options:
Solis for Spectroscopy A 32-bit and fully 64-bit enabled application for Windows (8, 8.1 and 10) offering rich functionality for data acquisition and processing. AndorBasic provides macro language control of data acquisition, processing, display and export. (Control of Andor Kymera and Shamrock spectrographs and a very wide range of 3rd party spectrographs is also available).
Andor SDK A software development kit that allows you to control the Andor range of cameras from your own application. Available as 32/ 64-bit libraries for Windows (8, 8.1 and 10) and Linux. Compatible with C/C++, C#, Delphi, VB.NET, LabVIEW and MATLAB. See andor.oxinst.com/third-party-software-matrix

Have you found what you are looking for?

Need a wider field of view? Andor's iKon-L SO 936 boasts a 27.6 x 27.6 mm active image area for direct X-ray detection or the Andor Balor 17F-12 offers a 49.5 x 49.2 mm active sensor area as an in-direct X-ray detection solution.

Need to detect harder X-rays? Andor offers a range of indirect detection cameras (HF range) that are compatible with industry-standard scintillators.

Need a specific mounting? Contact our experienced design team so we can make the perfect fit.

Need a customized version? Please contact us to discuss our Customer Special Request options.

Mechanical Drawings

Dimensions in mm [inches]

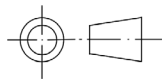

Third-angle projection

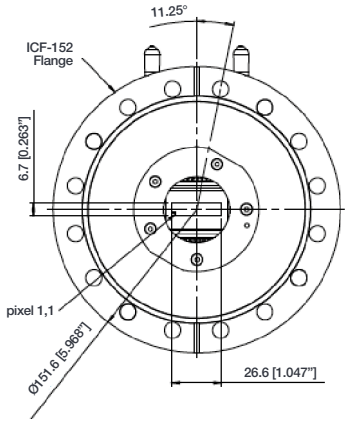

Front Dimensions

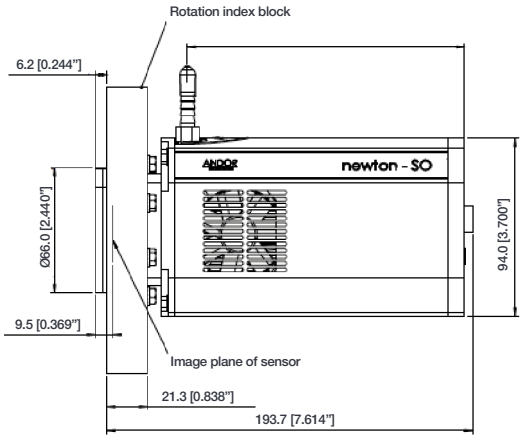

Side View

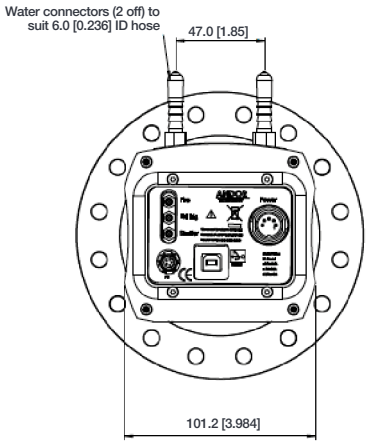

Rear View

Weight: 4.9 kg [10 lb 12 oz]

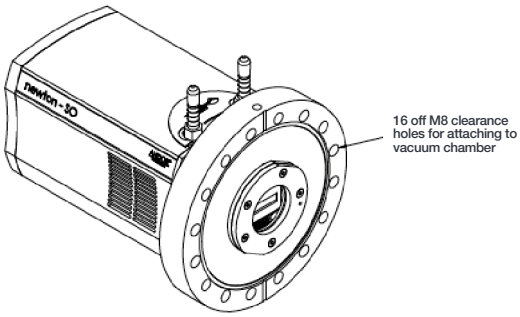

Mounting hole locations

Connecting to the Newton

Camera Control
Connector type: USB 2.0

TTL / Logic
Connector type: SMB, provided with SMB - BNC cable
Fire (Output), External Trigger (Input), Shutter (Output)

I²C connector
Compatible with Fischer SC102A054-130
Shutter (TTL), I²C Clock, I²C Data, +5 Vdc, Ground

Minimum cable clearance required at bottom of camera
100 mm

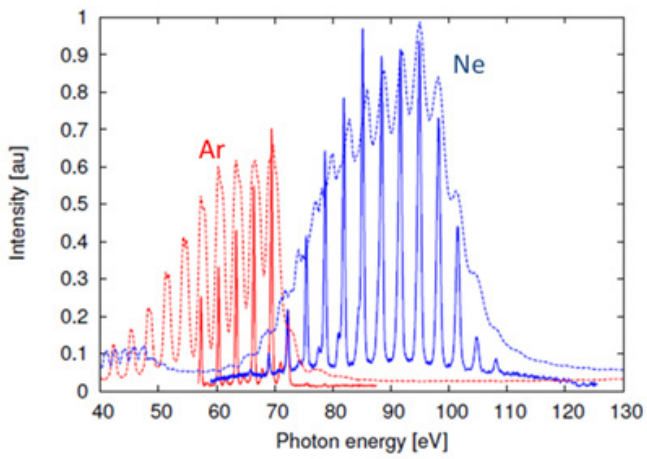

HHG spectra from neon and argon gas, recorded with an H+P XUV spectrometer (solid lines). Thin metal foils were used for spectral filtering (200 nm aluminium foil for the argon measurement, 200 nm zirconium foil for the neon measurement). *Courtesy of Dr. Jens Rauschenberge, Paul Scherrer Institut, Switzerland.*

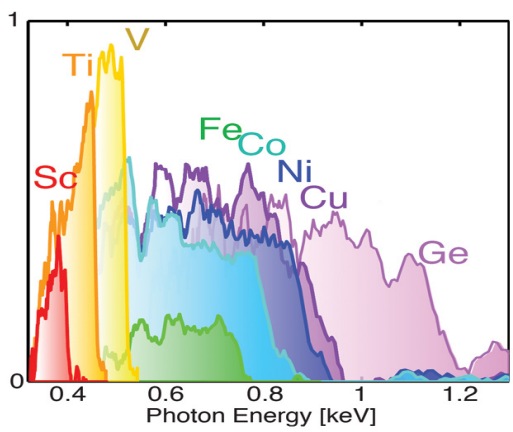

Coherent keV Supercontinuum for Broad Element-Specificity. *Courtesy of Dr. Daniil Kartashov Photonics Institute, Vienna University of Technology, Austria.*

Order Today

At Andor we are committed to finding the correct solution for you. With a dedicated team of technical advisors, we are able to offer you one-to-one guidance and technical support on all Andor products.

For a full listing of our local sales offices, please see: andor.com/contact

Our regional headquarters are:

Europe
Belfast, Northern Ireland
Phone +44 (28) 9023 7126
Fax +44 (28) 9031 0792

Japan
Tokyo
Phone +81 (3) 6744 4703
Fax +81 (3) 3446 8320

North America
Concord, MA, USA
Phone +1 (860) 290 9211
Fax +1 (860) 290 9566

China
Beijing
Phone +86 (10) 5884 7900
Fax +86 (10) 5884 7901

Items shipped with your camera:

1 x 2 m SMB-BNC connection cable
1 x 3 m USB 2.0 cable Type A to Type B
1 x PS-25 power supply with mains cable
1 x Electronic copy of user guides
1 x Individual system performance booklet
1 x Protective cover plate
4 x Fixing screws for cover plate [10]

Minimum Computer Requirements:

- 3.0 GHz single core or 2.4 GHz dual or quad core processor
- 2 GB RAM
- 100 MB free hard disc to install software (at least 1 GB recommended for data spooling)
- USB 2.0 High Speed Host Controller capable of sustained rate of 40 MB/s
- Windows (8, 8.1 and 10) or Linux

Operating & Storage Conditions

- Operating temperature: 0°C to 30°C ambient
- Relative humidity: < 70% (non-condensing)
- Storage temperature: -25°C to 50°C
- Maximum bakeout temperature: +55°C

Power Requirements

- 100 - 240 VAC, 50 - 60 Hz
- Power consumption: 48 W max

Footnotes: Specifications are subject to change without notice

1. IMPORTANT: Due to the sensor being exposed to environments outside of Andor's control there is no warranty on the sensor. For full details of Andor's Warranty Policy please refer to our webpage at www.andor.com/contact_us/support_request/. For key information on handling precautions for SO/HO open front end systems, please refer to the best practice guidelines on page 5. Note permanent damage can easily occur due to misuse.
2. Figures are typical unless otherwise stated.
3. Edge pixels may exhibit a partial response.
4. Based on a 920 camera with a horizontal pixel readout rate of 3 MHz, a vertical shift speed of 12.9 µs and in crop mode for 20 Rows. Achievable spectral rates will vary with selected trigger mode.
5. Stabilized cooling temperatures are given for slowest readout speed. Use of faster readout speeds (in order to achieve faster frame rates) may require a higher cooling temperature to be selected. Specified minimum air cooled temperature assumes ambient temperature of 25°C. Specified minimum temperature with coolant assumes coolant temperature of 10°C. All cooling performance can be compromised by the environment to which the sensor is exposed.
6. Quantum efficiency of the sensor at 20°C, as supplied by the sensor manufacturer.
7. Readout noise is for the entire system and is taken as a mean over the sensor area excluding any regions of blemishes. It is a combination of sensor readout noise and A/D noise.
8. Dark current measurement is averaged over the CCD area excluding any regions of blemishes.
9. Linearity is measured from a plot of counts vs exposure time under constant photon flux up to the saturation point of the system.
10. Fixing screws for mounting the flange to a vacuum chamber are not included.

Windows is a registered trademark of Microsoft Corporation.
LabVIEW is a registered trademark of National Instruments.
MATLAB is a registered trademark of The MathWorks Inc.

XNewtonSOSS 0924 R1